AVERY DENNISON MARKETING SPECIFICATION

THE SUBJECT MATTER DISCLOSED HEREIN EMBODIES PROPRIETARY INFORMATION WHICH IS THE CONFIDENTIAL PROPERTY OF THE AVERY DENNISON CO. NONE OF WHICH SHALL BE COPIED, REPRODUCED, DISCLOSED TO OTHERS, PUBLISHED OR USED IN WHOLE OR IN PART, FOR ANY PURPOSE OTHER THAN THAT FOR WHICH IT IS BEING MADE AVAILABLE WITHOUT THE EXPRESS ADVANCE WRITTEN PERMISSION OF A DULY AUTHORIZED AGENT OF THE COMPANY. THIS DOCUMENT IS THE PROPERTY OF THE AVERY DENNISON CO. AND IS TO BE RETURNED TO THE COMPANY ON DEMAND.

HISTORY

REV.	DATE	DESCRIPTION
N	1-25-18	UPDATED DIMENSION 5 NOTED SPECIAL CHAR.

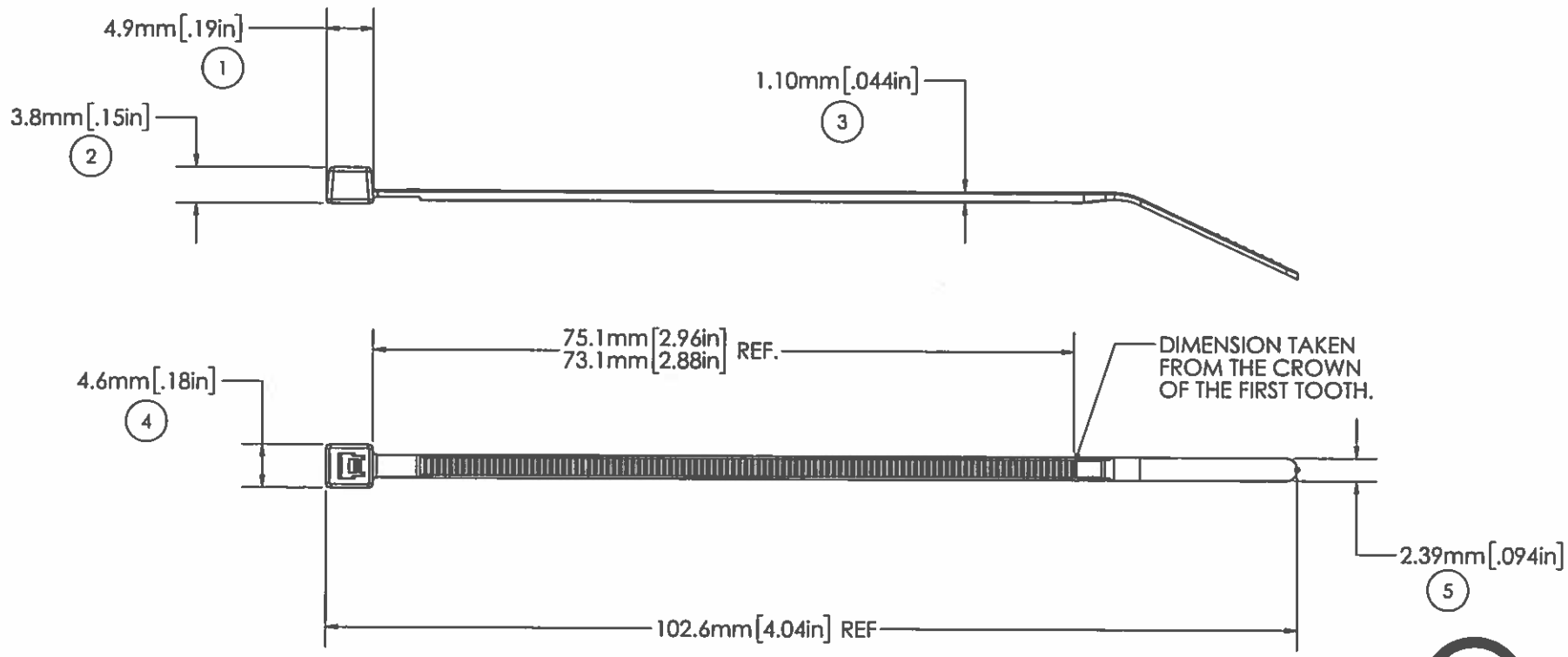

c UL us LISTED
POSITIONING DEVICE
E57800
TYPE 21

6	△ FLAMMABILITY RATING:	HB RATED PER FMVSS302
7	△ LOOP TENSILE STRENGTH:	18 lbs./80N MIN. PER AS-23190
	OPERATING TEMP RANGE:	-40°F (-40°C) TO 221°F (105°C)
	MIN. INSTALLATION TEMP:	32°F (0°C)
	WEIGHT:	0.29g
	BUNDLE DIAMETER:	Ø 1.6mm[.06in] TO Ø 22.2mm [.87in]
	TOOL:	12001 - HAND INSTALLATION TOOL 12500 - PNUEM. INSTALLATION TOOL
	TOOL TENSION SETTING:	1 - 3
	PACKAGING:	1000/BAG 25000/CASE

△ = DENOTES SPECIAL CHARACTERISTICS

APPROVALS: ENG. APPR. 1/25/18 Q.A. APPR. Caitlin Vaillancourt 1/25/18

SPECIFIED TOLERANCES ARE:
.XX ± .03 IN. .X ± .7 MM
.XXX ± .010 IN. .XX ± .25 MM
ANGULAR: ± 2°

MATERIAL: NYLON 6/6, HEAT STABILIZED

COLOR: BLACK

AVERY DENNISON
FASTENER DIVISION
FITCHBURG, MA 01420 U.S.A.
TEL. 1-800-225-5913
FAX. 978-353-8157

DESCRIPTION: 4 " CABLE TIE MINIATURE

STOCK NO. 08404-0

REV. N

5 4 3 2 1